Engineer, 10(2), 27-35 (1966)

HIGH-PRESSURE METAL FORMING

The use of extraordinarily high pressures offers
a new approach to metal-forming problems.

by Frank J. Fuchs, Jr.

ABSTRACT

It has long been known that in an environment of very high pressure the ductility of most metals increases dramatically. In the past little practical use has been made of this remarkable phenomenon; however, recent developments today indicate that the forming and working of metals under high environmental pressures will soon become an industrial process of considerable importance. Specifically a pressure vessel capable of repeatedly generating fluid pressures up to 500,000 psi has been constructed, and economical techniques have been developed for using high pressures to perform extrusion, tube expansion, deep drawing, tube flanging, and cutting operations. With the completion of current research an essentially new approach to metal-forming problems will be made available to the materials engineer.

The Western Electric Engineering Research Center is currently exploring the nature of high-pressure metal forming. The work, which was undertaken in search of techniques for exploiting this comparatively new process in regular manufacture, is still in its early stages, but the results to date have been gratifying. By the use of high-pressure techniques, ways have been found to make metal parts of improved quality at reduced cost. Similarly, complex parts have been made in a single operation in cases in which several operations were previously required.

Although in one sense all metal forming involves the use of high pressures (because high contact forces are needed to move the material plastically), high-pressure metal forming is characterized by the use of high forces to alter the basic formability of the material. As described in the Background on page 30, the fact that such alteration is possible has long been known as a laboratory phenomenon; however, until recently this phenomenon has not been developed as an industrial process. Now as a result of recent developments high-pressure forming includes a variety of processes that are designed to take advantage of the changes that occur in metals when they are subjected to enormous pressures.

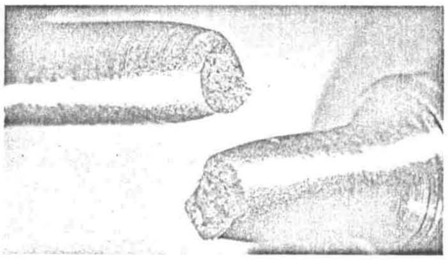

BROKEN UNDER ATMOSPHERIC PRESSURE

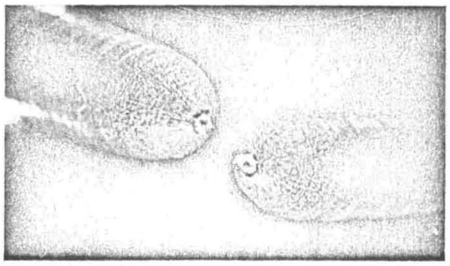

BROKEN UNDER 150,000 PSI

Figure 1. Increase in the ductility of steel under large hydrostatic pressure.

PROPERTIES OF METALS UNDER PRESSURE

Of such changes the most dramatic is an increase in the ductility of the metal. As shown in the upper half of Figure 1, under normal atmospheric pressure a rod of 1112 steel pulled laterally in a test of tensile strength is subject to a certain degree of deformation before breakage occurs. As shown in the lower half of the same illustration, however, in an environment pressurized (hydraulically) to 150,000 pounds per square inch an identical rod tested in the same fashion is deformed to a much greater extent before breakage occurs.[1]

The degree of deformation, or the measure of ductility, can be taken to be the ratio of the original cross-sectional area of the rod to the area of the neck of the deformed specimen. As shown in Table I, the increase in ductility so measured varies considerably with both the kind of metal and the pressure employed; however, in particular cases such as that of copper and certain types of steel the increase in ductility can be remarkable.

At the same time the metal is not softened in any sense of the word; in fact, metal deformed under pressure can become harder and stronger than is usually the case. Again, as shown in Table I, the true stress at fracture in the test previously described is much higher under conditions of high pres-

---

[1] The illustration pictures a ¼-inch tensile specimen pulled at the Western Electric Engineering Research Center in 1964.

sure than under normal conditions. It would thus appear that under pressure the material follows the normal work hardening curve much farther before fracture occurs.

By elongating samples under pressure and then retesting without pressure P. W. Bridgman found that the material retained the high strength developed under pressure and still exhibited greater ductility than specimens prepulled to the same hardness without pressure.[2] This effect gives rise to the suggestion that parts made by forming under pressure would have superior quality. The real significance of this idea is economic; parts made of inexpensive materials could become equivalent to parts made of more costly materials.

In addition to the residual increase in strength, some of the historical data show that materials normally used for tools display a higher yield strength under pressure. The most noticeable such material is tungsten carbide, for which Bridgman notes an increase of about 3 to 1 in tensile strength under high pressure.[3] Since some of the useful materials for parts increase in strength to a lesser extent under the same conditions, it is evident that tool life might be increased by conducting forming operations under pressure.

Unfortunately, the fatigue strength of tool materials under pressure has not been examined; however, it would be reasonable to assume that this property is also improved. Such an improvement would be very important in cold forming operations presently characterized by expensive tooling and frequent breakage.

Under high pressure the torsional shear strength and frictional behavior of metals also change. As shown in

Material	Pressure (Psi)	True Stress at Fracture (Lbs)	Initial Area / Area of Neck
P. W. Bridgman:			
1045 Steel	Atmospheric	176,000	2.2:1
	405,000	355,000	10.0:1
1020 Steel	Atmospheric	112,000	2.5:1
	420,000	286,000	20.0:1
Ketos' Tool Steel	82,000	351,000	1.3:1
	334,000	640,000	4.1:1
Aluminum	Atmospheric	22,000	5.7:1
	410,000	63,000	20.0:1
Copper	Atmospheric	86,000	2.5:1
	410,000	100,000	20.0:1
Brass	Atmospheric	120,000	2.1:1
	390,000	194,000	3.7:1
Tungsten Carbide	Atmospheric	300,000	1.0:1
	380,000	770,000	1.0:1
A. Bobrowsky:			
Tungsten	Atmospheric	—	1.0:1
	200,000	—	2.0:1
Beryllium	Atmospheric	—	1.1:1
	390,000	—	5.0:1
Molybdenum	Atmospheric	—	3.0:1
	270,000	—	20.0:1
L. F. Vereschagin:			
Brass	Atmospheric	—	1.4:1
	450,000	—	5.2:1
Steel	Atmospheric	—	2.3:1
	450,000	—	34.0:1
H. L. D. Pugh:			
"Mild" Steel	Atmospheric	—	3.4:1
	112,000	150,000	21.0:1
Copper	Atmospheric	70,000	3.7:1
	44,800	115,000	33.0:1

Table I. Tensile tests under hydrostatic pressure.

Material	Pressure (Psi)	Shear Stress (Psi)
Indium	710,000	14,200
	142,000	3,550
Aluminum	710,000	45,440
	142,000	11,360
Copper	568,000	69,580
Nickel	710,000	123,540
	142,000	17,040
Iron	710,000	142,000
	142,000	18,460
Tungsten	710,000	163,300
	142,000	15,620
Chromium	710,000	174,660
	142,000	45,440

Table II. Shear stress under pressure (after P. W. Bridgman).

---

[2] P. W. Bridgman, *Large Plastic Flow and Fracture*, McGraw-Hill Book Co., New York, 1952, pp. 294-306.

[3] *Ibid.*, p. 113.

Table II, when thin samples of different metals are twisted between opposing anvils, an increase in the pressure exerted by the anvils results in increases in the torsional stresses required to shear the samples; however, the amount of increase in each case depends upon the specific metal involved. This data can be of assistance in the solution of metal-forming problems. More particularly, the comparatively low frictional increase exhibited by such materials as indium provides a clue to the solution of high interface friction problems.

PRESSURE GENERATING EQUIPMENT

To take advantage of the unusual properties of materials under high pressure it is necessary to provide equipment capable of containing the tremendous forces required. At the same time—and this requirement is one of the more difficult aspects of high-pressure work—the equipment should also be capable of being cycled repeatedly. To these ends a number of methods are now available.

The earliest form of high-pressure chamber, a piston and cylinder arrangement, continues to be the most useful for purposes of metal forming. Of such arrangements the simplest is a monoblock design consisting of an open heavy-walled cylinder filled with suitable fluid and pressurized by pistons thrust in from either end. The pistons, which are made of material capable of withstanding heavy compressive stresses, normally include special sealing gaskets designed to prevent the leakage of fluid.

This type of pressure vessel has a limited pressure-containing ability related to the yield strength of the material at the surface of the bore. Faupel has shown with good experimental agreement that the pressure P containable in such a vessel is given by

$$P = \frac{S_y\,(R^2 - 1)}{\sqrt{3\,R^4 + 1}}$$

where S_y is the yield strength of the material and R is the ratio of the outer to the inner diameter.[4]

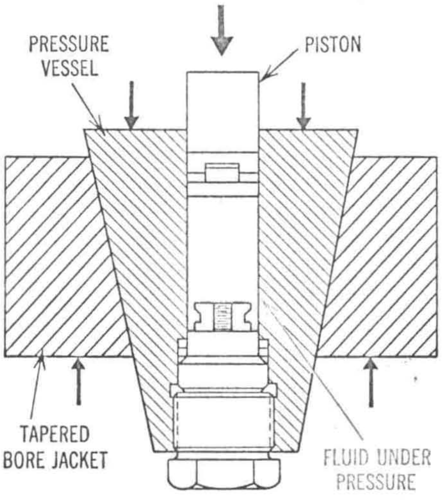

Figure 2. Use of a tapered bore jacket provides added radial support.

From this formula it can be seen that, even if the wall thickness of the vessel were increased indefinitely, the containable pressure would approach a limiting value equal to the yield strength divided by the square root of three. For the strongest available material, which has a yield strength of 300,000 psi, the maximum containable pressure in this type of vessel is thus less than 173,205 psi.

The situation can be improved considerably by making the vessel out of a series of shrunk rings such that a tangential compressive prestress exists at the bore before pressurizing. Yet even with this improvement limiting pressures are less than 250,000 psi.[5] Furthermore, if the pressure vessel is to be used for production cycling, it is necessary to use fatigue strength in place of yield strength as the measure of strength. In this case the maximum usable pressure becomes only about 150,000 psi for the best possible design.[6]

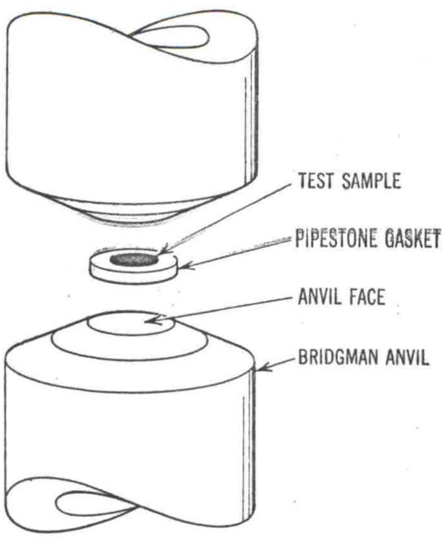

Figure 3. Conical anvils used for testing torsional shear strengths.

To attain higher pressures it is necessary to apply a radially supporting force to the outside of the pressure vessel. Bridgman found a way of supplying the required support by using a tapered bore jacket. As shown in Figure 2, the tapered jacket was forced down onto a pressure vessel designed with a matching taper on its outside surfaces. By coordinating the application of this support with the rise in pressure inside the vessel he was able to develop fluid pressures up to 450,000 psi.[7]

Although it is very useful, this type of equipment suffers from the difficulties involved in coordinating the increase in the radial pressure with that of the fluid pressure. In addition, variations in friction between the tapered members are hard to overcome.

On the other hand, the application of high pressure need not utilize fluid. For example, for testing thin materials under high pressure (as is normally done in torsional shear or friction tests) two opposing conical anvils are urged together by a press, as shown in Figure 3. While the sample compressed must necessarily be very thin to avoid extrusion out from between the ends of the anvils, it is possible to produce extremely high pressures by this method.

The pressures are made possible because the compressive forces, which

---

[4] J. H. Faupel, "Yield and Bursting Characteristics of Heavy-Wall Cylinders," *Transactions*, American Society of Mechanical Engineers, July 1956.

[5] The prestress provided at the bore by the shrunk rings can be added directly to the yield strength of the material. When a maximum prestress of 150,000 psi at the bore is added to a maximum yield strength of 300,000 psi, Faupel's equation shows a limiting pressure of approximately 250,000 psi.

[6] This figure is based upon a fatigue strength of 130,000 psi and a prestress compression of 130,000 psi.

[7] P. W. Bridgman, *Op. Cit.*, p. 38.

are concentrated over a small area at the point of application, spread out quickly through the conical configuration behind the sample; thus the overall stresses are not large. This concept is the principle of "massive support" developed very effectively by Bridgman. Although the particular equipment described is not used in metal-forming operations, it does

BACKGROUND—*The Discovery of High-Pressure Phenomena*

The effect of high pressure on the properties of metal was first noted by P. W. Bridgman in 1912. His early work, which was described in a paper published in *The Physical Review*, dealt with the behavior of steel and copper cylinders collapsed by immersion in high-pressure fluid.[1] The pressures used ranged up to 180,000 psi. One of the effects noted was that under these conditions the plastic flow was much more extensive than that normally encountered before rupture.

The same year Bridgman also published a paper dealing with the fracture of rods subjected to radial pressure along portions of their lengths.[2] In this work the peculiar effect termed "pinch-off" was first revealed. Pinch-off is the phenomenon by which a radial hydraulic pressure of sufficient intensity causes a rod to sever with a tensile type of fracture, even though the rod may be compressed axially.

Continuing his research into high-pressure physics, Bridgman concentrated on methods of generating high fluid pressures, with which he performed experiments in many areas—such as compressibility, electrical resistance, and phase changes under high pressure. In the course of this work he developed piston and cylinder equipment useful for laboratory experiments at pressures up to 450,000 psi.[3] During the period from 1912 until 1940, however, most of the work had little specific bearing on problems of metal forming. The one exception was a series of experiments measuring the torsional shear of specimens compressed between carbide anvils at pressures up to 750,000 psi; these experiments provided coefficient-of-friction and shear-strength data that are extremely useful in the analysis of certain metal-forming situations.[4]

At the outbreak of World War II researchers at the Naval Research Laboratories observed inexplicable behavior associated with the impact of projectiles against armor plate. As a result Bridgman was consulted and subsequently given research contracts to conduct further studies into the effect of high pressure on metal deformation. During this period he developed his celebrated tensile tests under pressure (see Figure 1) and proved the dependence of ductility on pressure.[5]

Having already developed piston-cylinder equipment for generating fluid pressures up to 450,000 psi, Bridgman found it relatively simple to incorporate a tensile testing setup in which movement of the high-pressure piston encountered one of the grips holding the test specimen and moved it so as to cause elongation. By measuring the pressure in relation to the stroke of the piston he could determine the final plastic behavior of the part at a given pressure. It was characteristic of Bridgman's test that the environmental pressure was not constant but rather increased linearly with the extension of the part. This condition obtained because he depended upon the compressibility of the fluid to allow the piston to move sufficiently to elongate the specimen.

In addition to the simple tensile tests under pressure Bridgman also made uniaxial compression tests and tensile tests on hollow cylinders. Most of this work, and particularly the tensile tests, dealt with alloys of steel. Also, in his search for better piston materials, he made compression tests under pressure on materials such as tungsten carbide, diamond, and sapphire rod. Finally, Bridgman conducted experiments in the use of pressure to punch holes in steel plate,[6] and he made attempts to draw wire under pressure.[7] In general, this period, which culminated in Bridgman's receipt of a Nobel prize in 1946, was extremely fruitful in that it provided much fundamental data relating material behavior to pressure.

Since that time a number of other workers have duplicated and improved on the Bridgman techniques of deforming metal under pressure. In Russia L. F. Vereschagin duplicated the tensile test apparatus and repeated the Bridgman tests on steel.[8] Vereschagin carried the work up to slightly higher pressures and included other metals such as copper, brass, and aluminum. In addition, he was one of the first to extrude round and shaped rods under high pressure. In Scotland H. L. D. Pugh, using similar apparatus, performed both tensile testing and wire drawing.[9] Pugh's tensile apparatus was a decided improvement over Bridgman's in that Pugh found a way to keep the pressure constant throughout extension of the part. He was also successful in photographing the neck region of the specimen during the test. In this country A. Bobrowsky has been performing tensile tests under pressure on difficult materials such as tungsten, beryllium, and molybdenum.[10] He has also made compression, bending, and extrusion tests under pressure. As described in the article, much of the data compiled by these researchers is of fundamental importance to the metal-forming field.

---

[1] P. W. Bridgman, "The Compression of Thick Cylinders under Hydrostatic Pressures," *Physical Review*, Vol. XXXIV (1912), pp. 1-24.

[2] P. W. Bridgman, "Breaking Tests under Hydrostatic Pressure and Conditions of Rupture," *Philosophic Magazine*, Vol. XXIV (1912), pp. 63-80.

[3] P. W. Bridgman, *Large Plastic Flow and Fracture*, McGraw-Hill Book Co., New York, 1952, p. 38.

[4] *Ibid.*, pp. 279-292.

[5] *Ibid.*, pp. 39-86.

[6] *Ibid.*, pp. 134-141.

[7] *Ibid.*, pp. 174-179.

[8] E. I. Beresnev and L. S. Vereschagin (translation by Morris D. Friedman), *Large Plastic Deformation of Metals at High Pressures*, AKAD. MAUK Press, Moscow, 1960, pp. 1-11.

[9] H. L. D. Pugh, "The Mechanical Properties and Deformation Characteristics of Metals and Alloys under Pressure," *NEL Report No.* 142, Mechanical Engineering Laboratory, Glasgow.

[10] A. Bobrowsky, E. A. Stack, and A. Austen, "Extrusion in Drawing Using High-Pressure Hydraulics," *Technical Paper No. SP*65-33, American Society of Mechanical Engineers, 1964.

serve to point the way toward effective designs utilizing this principle.

Another type of pressure-generating equipment that might possibly be applied to metal forming is the multiple-anvil press introduced by H. T. Hall.[8] This apparatus, which was used in the early work to synthesize diamond, is used extensively today in materials investigations, particularly those in which high temperatures as well as high pressures are required. As shown in Figure 4, the equipment consists of four or more truncated pyramidal anvils that can be driven together by hydraulic cylinders to enclose and apply pressure to a central volume in the shape of a tetrahedron or cube. Initially, the anvils are separated by a pyrophyllite gasket shaped to line the closure space and enclose the test sample. Pyrophyllite has the ideal properties of becoming compressible and ductile under high pressure and also of having an extremely high coefficient of friction—the latter property allowing it to maintain its sealing position without extruding outward. In addition, pyrophyllite is machinable and an excellent insulator of heat.

Very similar to the multiple-anvil press is the General Electric "belt apparatus", which consists of two conical high-pressure pistons surrounded by a cylinder having a matched taper at its ends.[9] With this design and the use of pyrophyllite gaskets, the action of the pistons entering from either end can subject the enclosed cylindrical volume to enormous pressure. In fact, both the press and the belt apparatus are capable of generating pressures in the neighborhood of 2,000,000 psi; however, the fact that expensive gasketing is employed and discarded after each operation makes it difficult to find appropriate metal-forming applications.

Fortunately, most metals enjoy a great increase in ductility without being subjected to more than 200,000 psi; in fact, the more commonly formed materials such as copper, brass, and aluminum reach maximum ductility at pressures below 100,000 psi. For this reason the shrunk-ring cylinder, despite its limitations, is by far the most widely used for metal forming.

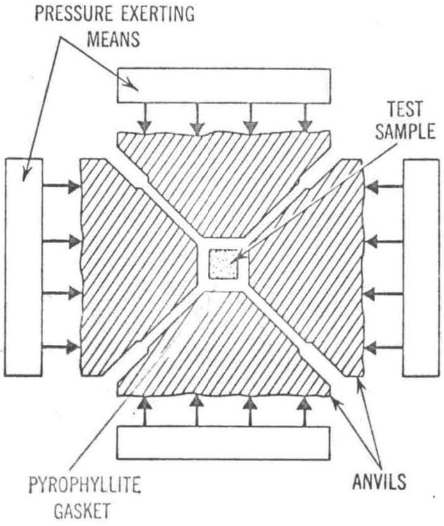

Figure 4. Multiple-anvil press first used to synthesize diamond.

A NEW PRESSURE VESSEL

To form the more difficult materials it is desirable, nevertheless, to have a vessel capable of cycling repeatedly up to 500,000 psi. Such a vessel has recently been developed at the Western Electric Engineering Research Center. Incorporating many of the outstanding features of the higher-pressure equipments, the new vessel can also be as easily loaded and unloaded as the simple piston-cylinder device.

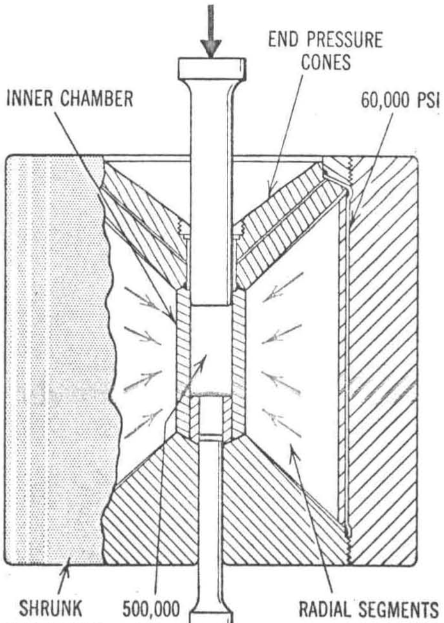

Figure 5. A self-sealing high-pressure vessel capable of repeated cycling.

As shown in Figure 5, the new pressure vessel is primarily a relatively thin-walled cylinder made of hard material. The particular cylinder diagrammed has a two-inch bore and a seven-inch working length. To support this chamber a number of radial segments are mounted to its outer surface and held in place by a thin press-fit ring. The whole assembly in turn is enclosed by a shrunk-ring jacket that will contain a pressure of 60,000 psi without fatigue. In addition, to support the ends of the chamber and prevent high fluid pressure from "pinching off" the chamber wall conical members are provided at the top and bottom. The lower one is threaded into the outer jacket, and the upper one is made to act as a hydraulic piston. Finally, passageways are drilled through the upper cone to allow fluid to pass from the region just above the high-pressure chamber out to the large jacket.

In operation of this pressure vessel, the inner chamber, into which the part or test sample is placed, is filled with fluid, and a hydraulic press is used to force the upper piston into the top of the chamber. As the action of the piston increases the pressure of the fluid, the chamber tends to expand and thereby permit fluid to leak past the close-fitting piston. This fluid flows through the special passageways out to the containing jacket, where the fluid applies pressure to the outside of the radial segments and to the top of the conical end support. The segments and the end support in turn transmit the pressure inwards to the inner chamber, which closes down on the piston to stop further leakage.

Since the supporting fluid pressure in this design acts over a large area while the high-pressure fluid within

---

[8] Alexander Zeitlin, "Equipment for Ultrahigh Pressures," *Mechanical Engineering*, October 1961, pp. 37-43.

[9] H. T. Hall, "Ultrahigh Pressure, High-Temperature Apparatus, The Belt", *Review of Scientific Instruments*, Vol. XXXI, No. 2 (February 1960), pp. 125-131.

the working chamber acts on a comparatively small surface, equilibrium can be maintained with small jacket pressures. For the particular apparatus shown, for example, the jacket pressure does not exceed 60,000 psi when the working pressure is 500,000 psi. Furthermore, the inner cylinder expands and contracts by only a slight amount that is well within the elastic limit of the material. The limiting factor in the design is thus the compressive strength of the piston.

SEALS AND FLUID

The seals used in high-pressure forming are quite simple. As shown in Figure 6, a typical seal consists of a beryllium copper anti-extrusion ring mounted against a tapered seat and supported by a soft cup packing. When pressure is applied through the packing, the ring, which is pressed against the tapered seat, moves so as to seal the interface of piston and cylinder. For repeated cycling it is best to use the minimum possible shoulder angle. In addition, it is much better to mount the seal in the cylinder wall than in the piston. In the former position less extrusion and flexure of the beryllium ring occurs, and it also becomes unnecessary to fill the chamber to a precise level.

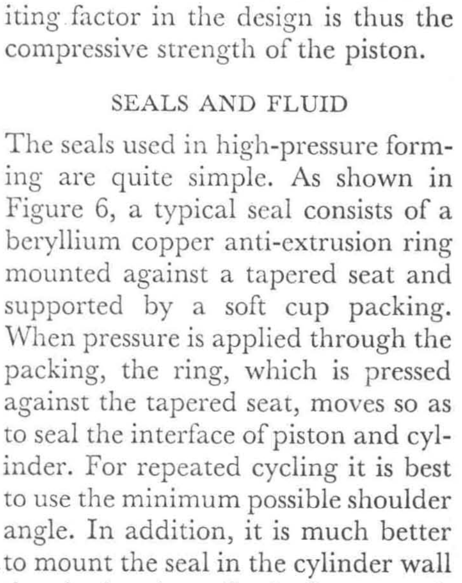

Figure 6. Typical high-pressure seals.

Another major area of concern is selection of a suitable working fluid. For a given forming operation the ideal fluid would be one that possessed a reasonably high viscosity at the beginning of the pressure cycle and a much higher viscosity with still reasonable mobility at the height of the pressure cycle. The increasing viscosity is helpful because it makes sealing easier. This consideration very often turns out to be the deciding factor determining the success or failure of high-pressure forming, because the seal is necessarily at a tool and workpiece interface where gaskets cannot be used. In addition, the fluid should possess good lubricity.

At present castor oil, kerosene, and gasoline with additives to increase lubricity are being used successfully, but these fluids leave much to be desired. Better fluids must be discovered or developed. Furthermore, since most fluids solidify at pressures within the 500,000 psi range, work should be done to determine the properties of fluids after solidification. There will be processes in which it could be helpful to have the fluid solidify providing it retains a certain amount of plasticity.

EXTRUSION

The first high-pressure forming process to be used successfully was extrusion. Bridgman extruded copper with a 16 to 1 reduction of cross-sectional area by high-pressure methods, and he proved the practicality of the process.[10]

As shown in Figure 7, high-pressure extrusion is similar to conventional ram extrusion except for the fact that fluid rather than mechanical ram pressure is applied to the billet. In addition, the billet is surrounded by high-pressure fluid. With this arrangement friction between the billet and container is entirely eliminated, and more radial force is applied to the outer surface of the billet than is conventionally the case.

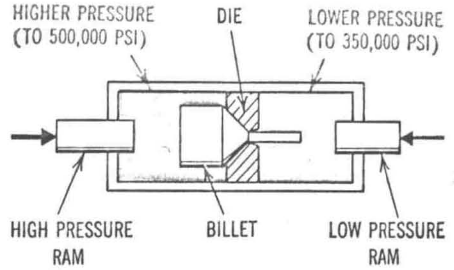

Figure 7. High-pressure extrusion.

The result of this more favorable stress field is that greater reductions of area can be made with lower ram pressures. A further advantage is found in better lubrication of the die. Finally, material extruded in this fashion has a much more uniform hardness across the diameter than material extruded conventionally.

For some materials the extrusion pressure required is not high enough to cause the transition to ductility previously described. In these cases it is only necessary (as shown in Figure 7) to create an environmental pressure at the exit end of the extrusion die to prevent extrusion until a higher pressure is built up within the chamber.

A number of researchers have used this technique successfully to extrude difficult materials. Pugh used it to extrude magnesium, bismuth, and titanium.[11] Bobrowsky has extruded sound rod of tungsten, beryllium, and molybdenum.[12] R. J. Fiorentino at Battelle Memorial Institute has done a great deal of research into the extrusion of 4340-steel round and shaped rod and has also succeeded in extruding aluminum at a 200 to 1 reduction of area.[13] In the light of this work it is evident that high-pressure extrusion may soon become commercially important in the manufacture of wire and high-strength rod.

---

[10] P. W. Bridgman, *Op. Cit.*, p. 178.

[11] H. L. D. Pugh, "The Mechanical Properties and Deformation Characteristics of Metals and Alloys under Pressure," *NEL Report No.* 142, Mechanical Engineering Laboratory, Glasgow.

[12] A. Bobrowsky, E. A. Stack, and A. Austen, "Extrusion in Drawing Using High-Pressure Hydraulics," *Technical Paper No. SP*65-33, American Society of Mechanical Engineers, 1964.

[13] F. J. Fiorentino, *Final Report on Investigations of Hydrostatic Extrusion*, Battelle Memorial Institute, January 1965.

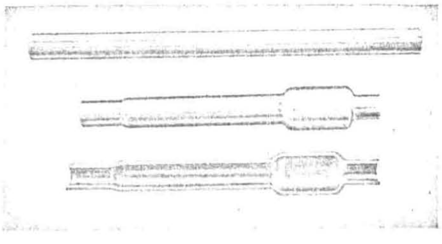

Fig. 8. Tubing expanded under high pressure.

EXPANSION OF TUBING

One of the first high-pressure forming processes to be used at Western Electric was a new method for expanding tubing. With this method it is possible to increase the diameter of sections of tubing by as much as 100 percent without simultaneously decreasing the thickness of the wall of the expanded section. Such a part is pictured in Figure 8. By contrast, by conventional methods a tube of copper can be expanded only 30 percent before fracture; furthermore, the wall thickness in the expanded section becomes quite thin.

As diagrammed in Figure 9, the device used to perform the expansion consists basically of a high-pressure cylinder the inner diameter of which corresponds to the outmost diameter of the desired part. At one end of this pressure chamber a plug shaped to receive one end of the tubing is pressed into the chamber. Between this plug and the chamber the interference fit is such that the fluid pressure within the chamber can become high enough to increase the ductility of the tubing before the chamber expands and permits fluid to escape. At the opposite end of the pressure chamber a sliding die constructed to incorporate a cavity for containing the other end of the blank is inserted. A seal prevents leakage of fluid from around this die. Finally, a high-pressure piston is mounted so as to feed fluid into one end of the tubing.

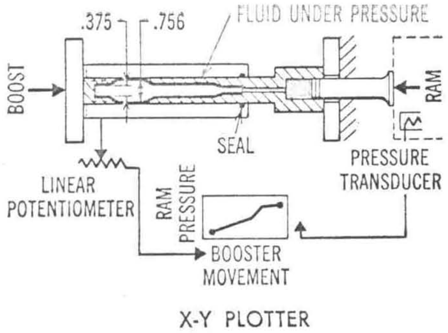

Figure 9. The tubing expansion apparatus.

In operation, the apparatus is placed into a double-ram press in which the sliding die is forced into the pressure chamber to compress the blank axially and increase the fluid pressure external to the blank. Simultaneously, the opposing ram of the press forces the high-pressure piston in to raise the fluid pressure within the tubing and so expand the tubing. The tubing is thus shortened as it is expanded, and the thickness of the walls remains unchanged.

The means of control shown in the illustration consists of a pressure transducer to monitor the internal pressure, a linear potentiometer to measure the degree of compression of the blank, and an X-Y plotter to display the operational relationship between these two variables. By operating in accordance with different curves on the plotter, one can experiment with various pressure-compression relationships.

In the production operation cam-operated pressure control is employed, and a loading pin is used to hold the part before and after forming. In addition, the chamber is maintained constantly full of fluid. With this arrangement the whole operation takes only about 20 seconds. As a result the production cost of expanding tubing by this method is about 15 times less than the cost of performing the operation by previously known methods.

DEEP DRAWING

Another important application of high-pressure metal forming is found in the drawing of shells. High pressure has been used successfully to draw deep shells from blanks of aluminum, copper, brass, and steel. With this technique it is possible to obtain a blank-to-shell-diameter ratio of as much as 4 to 1 in such a material in a single drawing operation. In addition, shells have been drawn in which the thickness of the walls have been reduced to 40 percent of the thickness of the blanks. This consideration makes it possible to draw very long shells from comparatively small blanks.

By contrast, with conventional techniques the maximum blank-to-shell-diameter ratio obtainable in a single draw is only about 2.2 to 1. Furthermore, while this ratio applies to very drawable material such as cartridge brass or mild steel, some of the more difficult materials can only be drawn slightly. In consequence, the new method has so far been shown to replace as many as four successive conventional drawings with intermediate annealings of the part. Finally, with conventional techniques the thickness of the shell wall remains the same as the thickness of the blank.

A simplified method for deep drawing under pressure is illustrated in Figure 10. As in the conventional process a draw die, a hold-down plate, and a drawing punch are provided, but they are enclosed within a high-pressure chamber. In operation, the chamber is filled with fluid, and a piston is used to raise the pressure of the fluid. The high fluid pressure serves both to increase the ductility of the blank and to assist the drawing operation. The latter effect occurs because the draw punch is made to include a shoulder so that the fluid

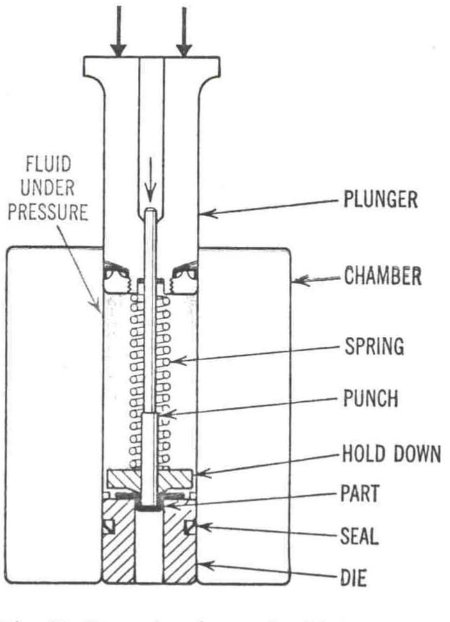

Fig. 10. Deep drawing under high pressure.

will press the punch downward into the blank. For difficult materials a back pressure can also be employed much as is done in fluid extrusion work.

To provide a measure of quality, some of the shells made by the new process were sectioned, as shown in Figure 11, and micrographs were made to check the grain structure and hardness of the drawn material. In the case of copper it was found that shells made with a 4 to 1 blank-to-shell-diameter ratio possessed a hardness of Rockwell B-75 in the drawn walls. This temper is equivalent to that of extremely hard-drawn copper wire; however, the parts have retained considerable toughness.

TUBE FLANGING

In many cases it is desirable to fabricate heavy flanges on the ends of thin-walled tubing. Conventionally this operation is performed by either soldering or welding a specially constructed plate onto either end of the tubing. If, however, it is necessary to maintain the inside dimensions of the tubing within close tolerances, heat distortion during the flanging process makes it necessary subsequently to re-size the tube opening. The re-sizing operation is particularly necessary in the case of copper microwave transmission lines, which are manufactured at Western Electric in considerable quantities in various sizes ranging from about 1 to 3 inches in diameter.

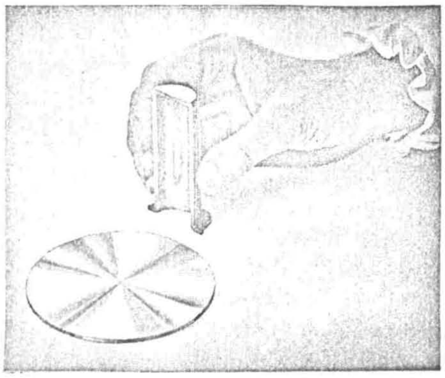

Figure 11. Section of a shell drawn under high pressure. (Shown with original blank.)

With this type of product in mind a high-pressure process was developed to perform the flanging operation. In principle the new process is the reverse of high-pressure deep drawing. Since no heat distortion takes place during the process, subsequent re-sizing of the tubing is unnecessary.

The first successful method for forming flanges with high pressure is diagrammed in Figure 12. In this process the tubing to be flanged is supported on a mandrel and placed within a high-pressure chamber filled with fluid. As a hydraulic ram pushes the mandrel farther into the chamber, a step on the mandrel pressurizes the fluid, which in turn forces the end of the tubing to start moving through an extrusion die opening at the end of the chamber. On the other side of this opening a back-up die is located in close proximity to the face of the extrusion die. Between the two dies just enough space is provided to permit the lip of the tube to flair outward into a flange limited ultimately by a retainer ring. The back-up die, which is supported by a hydraulic cylinder, requires about 100,000 psi contact pressure from the flange material before the die will back off and so allow the thickness of the flange to increase. This resistance provides the high hydrostatic pressure required to raise the flange material into a state of higher ductility and thus make possible the flow of tubing metal into the flange.

This technique proved highly successful, and a number of small flanges of aluminum tubing were made with the apparatus described. This apparatus, however, possessed two serious disadvantages that limited its application. First, since some of the parts to be made ranged up to 12 feet in length, loading and unloading the apparatus posed a difficult problem. Second, if flanges were to be placed on both ends of a piece of tubing—as is normally the case—the extrusion die would have to be split to allow removal. With such a split die it would have been very difficult to seal the chamber against fluid leaks at pressures up to 300,000 psi.

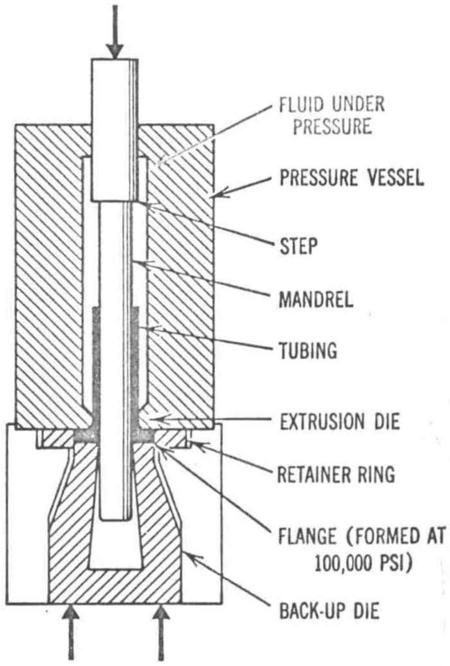

Figure 12. Early method for forming a flange under high pressure.

In view of these considerations the apparatus has finally evolved into that shown in Figure 13. In place of the fluid previously used to contain the tube a Teflon jacket now surrounds the part. The back portion of the jacket is made thin so that friction prevents the jacket from transmitting high back pressure along the tube; as a result the tube can project out of the device into the open without giving rise to the problem of "pinch off". In operation, the pressure in the Teflon jacket is raised to a high level—

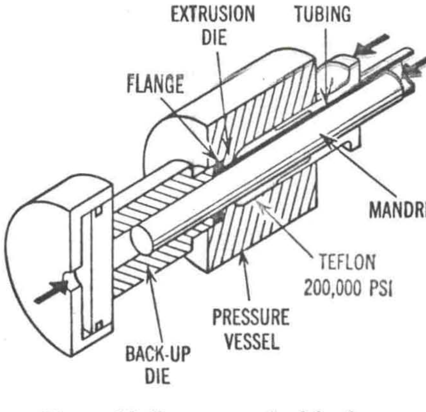

Figure 13. Present method for forming a flange under high pressure.

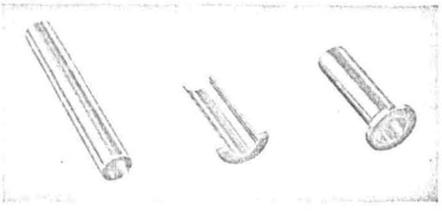

Fig. 14. Tubing flanged under high pressure.

200,000 to 300,000 psi—and the tubing is thus locked by friction to the surface of the mandrel. Now the mandrel can be pushed, or preferably pulled, to cause the tubing to extrude into the flange forming cavity against the back-up die. With this design the extrusion die can be split, because it is easy to seal the high-pressure cavity against extrusion of Teflon plastic.

As illustrated by some of the parts made from it (Figure 14), this version of the flanging process is highly successful. Flanges possessing thicknesses of over eight times the original wall thicknesses have been produced. In this regard one of the interesting features of the process is that, after a certain flange thickness has been reached, little or no additional pressure is required to continue flange growth. Within the flanges themselves the material reaches hardness levels greater than Rockwell B-80 and here again retains toughness. In fact, in the case of 3-inch copper tube the flange material has as high a yield point as the stainless-steel flange previously used.

It might be well at this point to emphasize the fact that the flanging process, although making use of the classic Bridgman pressure-ductility relationship, does not employ fluid. The process thus points the way to a broader, more effective approach to metal-forming problems.

CUTTING OPERATIONS

While hole-punching, blanking, and cutting-off operations are not usually considered metal forming, high-pressure fluids have been used for these purposes. Some of the processes deserve mention.

In the case of flange forming it was found that, if the tube had a smooth inner edge of uniform radius, the preliminary flaring movement was made much easier. Such a curved edge can be obtained quickly and easily by using high-pressure fluid to cut off the tube. By surrounding the tube with a sharp-edged die and then delivering fluid pressure to the inside of the tube opposite the die, it is possible to cut the tube wall neatly in such fashion that the inner edge of the end of the tube is smoothly curved over almost one-half the thickness of the wall.

A similar cutting operation can be used to pierce holes in tubing. In one case, for example, it was desired to pierce a section of waveguide with a number of holes all possessing smoothly curved inner edges. By locating die plates on the outside of the waveguide and subjecting the inside of the waveguide to high-pressure fluid, all the desired holes were punched simultaneously.

CONCLUSION

In summary, the major advantage of high-pressure metal forming lies in the ease with which otherwise separated operations can be combined. Not only can greater deformation be produced in a single operation, but also different areas of a part can be shaped simultaneously by hydrostatic pressure. Thus some very complex shapes can be made at comparatively low cost. And, of course, improved material strength is almost always obtained as a result of the use of high pressure.

Although much progress has been made in the field of high-pressure metal forming, considerable development effort is still required. In particular, research will be of great value in the following areas:

1. Development of long-life seals for very high pressures.
2. Investigation of fluid viscosities and solidification characteristics under pressure.
3. Investigation of the strength and fatigue properties of tool steel under high pressure.
4. Thorough study of the properties of materials after deforming under pressure.
5. Evaluation of the friction properties displayed by material within a high-pressure environment.
6. More extensive and varied tests of ductility under pressure to obtain formability data.

With the proper completion of work in these areas the future of high-pressure forming seems unlimited. Applications for the new processes are numerous, and more are suggested each day.

Aside from the potentially large use of high-pressure forming techniques, the new development presents the materials engineer with a new and very fundamental approach to forming. He is no longer limited by the handbook values of elongation or reduction of area. By the use of suitable pressure he can select the level of ductility he needs for the particular job at hand. Even more important, he now knows the absolute level and directionality of the stress field that must be applied to the workpiece to form a desired part. With this knowledge the materials engineer is armed with a very powerful technique for working out process design details.

Frank J. Fuchs, Jr. received a Bachelor of Science degree in mechanical engineering from Duke University in 1947. In that same year he joined Western Electric Co. at Winston-Salem, North Carolina, as a project engineer on airborne radar. In 1956 he was promoted to a Senior Staff Engineer in charge of metal-forming development. He joined the staff of the Engineering Research Center, Princeton, New Jersey, in 1962, as a Research Leader. Mr. Fuchs is a Registered Professional Engineer in North Carolina and New Jersey. In addition he holds more than thirty patents on various machines, tools and processes. As a result of his development of a process for high-pressure metal forming, he received the Roebling Award from the Delaware Chapter of the American Society of Metals. His process was also selected as one of the 100 most significant products of 1965 by Industrial Research Magazine.